Product data sheet
Characteristics

TM3DQ16R
Discrete output module, Modicon TM3, 16 relay outputs (screw) 24 VDC



Main

Range of Product	Modicon TM3
Product or Component Type	Discrete output module
Range Compatibility	Modicon M241 Modicon M251 Modicon M221 Modicon M262
Discrete output type	Relay normally open
Discrete output number	16
Discrete output logic	Positive or negative
Discrete output voltage	240 V AC relay output 30 V DC relay output
Discrete output current	2000 mA relay output

Complementary

Discrete I/O number	16
Current consumption	0 mA 24 V DC via bus connector at state off) 75 mA 24 V DC via bus connector at state on)
Response time	10 ms (turn-on) 5 ms (turn-off)
Mechanical durability	20000000 cycles
Minimum load	10 mA 5 V DC relay output
Local signalling	For output status 1 LED per channel (green)
Electrical connection	10 x 1.5 mm² removable screw terminal block pitch 3.81 mm for outputs
Maximum cable distance between devices	Unshielded cable <98.43 ft (30 m) relay output
Insulation	Between output and internal logic 2300 V AC Between outputs 750 V AC Between output groups 1500 V AC
Marking	CE
Mounting support	Top hat type TH35-15 rail IEC 60715 Top hat type TH35-7.5 rail IEC 60715 Plate or panel with fixing kit
Height	3.54 in (90 mm)
Depth	3.33 in (84.6 mm)
Width	1.08 in (27.4 mm)
Net Weight	0.32 lb(US) (0.145 kg)

Environment

Standards	EN/IEC 61010-2-201 EN/IEC 61131-2
Product Certifications	C-tick cULus
Resistance to electrostatic discharge	8 KV in air EN/IEC 61000-4-2 4 kV on contact EN/IEC 61000-4-2
Resistance to electromagnetic fields	9.14 V/M (10 V/m) 80 MHz...1 GHz EN/IEC 61000-4-3 2.74 V/M (3 V/m) 1.4 GHz...2 GHz EN/IEC 61000-4-3 0.91 V/m (1 V/m) 2 GHz...3 GHz EN/IEC 61000-4-3
Resistance to magnetic fields	98.43 A/m (30 A/m) 50/60 Hz EN/IEC 61000-4-8
Resistance to fast transients	2 kV relay outputEN/IEC 61000-4-4
Surge withstand	1 kV I/O common mode EN/IEC 61000-4-5 DC

The information provided in this documentation contains general descriptions and/or technical characteristics of the performance of the products contained herein.
This documentation is not intended as a substitute for and is not to be used for determining suitability or reliability of these products for specific user applications.
It is the duty of any such user or integrator to perform the appropriate and complete risk analysis, evaluation and testing of the products with respect to the relevant specific application or use thereof.
Neither Schneider Electric Industries SAS nor any of its affiliates or subsidiaries shall be responsible or liable for misuse of the information contained herein.

Resistance to conducted disturbances	10 V 0.15...80 MHz EN/IEC 61000-4-6 3 V spot frequency (2, 3, 4, 6.2, 8.2, 12.6, 16.5, 18.8, 22, 25 MHz) Marine specification (LR, ABS, DNV, GL)
Electromagnetic emission	Radiated emissions 40 dBµV/m QP class A 10 m)30…230 MHz EN/IEC 55011 Radiated emissions 47 dBµV/m QP class A 10 m)230…1000 MHz EN/IEC 55011
Ambient Air Temperature for Operation	14…95 °F (-10…35 °C) vertical installation 14…131 °F (-10…55 °C) horizontal installation
Ambient Air Temperature for Storage	-13…158 °F (-25…70 °C)
Relative humidity	10…95 %, without condensation in operation) 10…95 %, without condensation in storage)
IP degree of protection	IP20 with protective cover in place
Pollution degree	2
Operating altitude	0...6561.68 ft (0...2000 m)
Storage altitude	0.00…9842.52 ft (0…3000 m)
Vibration resistance	3.5 mm 5…8.4 Hz DIN rail 3 gn 8.4…150 Hz DIN rail 3.5 mm 5…8.4 Hz panel 3 gn 8.4…150 Hz panel
Shock resistance	15 gn 11 ms

Ordering and shipping details

Category	22533-M2XX PLC & ACCESSORIES
Discount Schedule	MSX
GTIN	3606480611445
Nbr. of units in pkg.	1
Package weight(Lbs)	8.78 oz (248.9 g)
Returnability	Yes
Country of origin	TW

Packing Units

Unit Type of Package 1	PCE
Package 1 Height	2.92 in (7.426 cm)
Package 1 width	4.14 in (10.516 cm)
Package 1 Length	4.95 in (12.583 cm)
Unit Type of Package 2	S04
Number of Units in Package 2	42
Package 2 Weight	26.46 lb(US) (12.0 kg)
Package 2 Height	11.81 in (30 cm)
Package 2 width	15.75 in (40 cm)
Package 2 Length	23.62 in (60 cm)

Offer Sustainability

Sustainable offer status	Green Premium product
California proposition 65	WARNING: This product can expose you to chemicals including: Lead and lead compounds, which is known to the State of California to cause cancer and birth defects or other reproductive harm. For more information go to www.P65Warnings.ca.gov
REACh Regulation	REACh Declaration
REACh free of SVHC	Yes
EU RoHS Directive	Pro-active compliance (Product out of EU RoHS legal scope) EU RoHS Declaration
Toxic heavy metal free	Yes
Mercury free	Yes
RoHS exemption information	Yes
China RoHS Regulation	China RoHS Declaration
Environmental Disclosure	Product Environmental Profile
Circularity Profile	End Of Life Information

WEEE	The product must be disposed on European Union markets following specific waste collection and never end up in rubbish bins.
PVC free	Yes

Dimensions

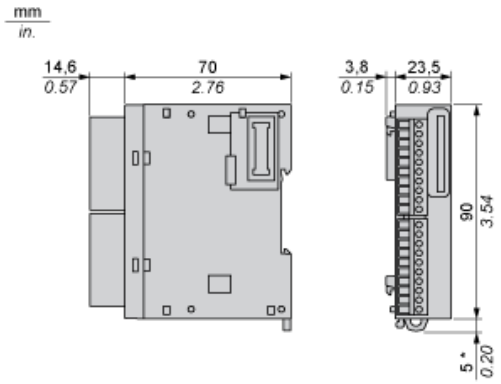

(*) 8.5 mm/0.33 in. when the clamp is pulled out.

Spacing Requirements

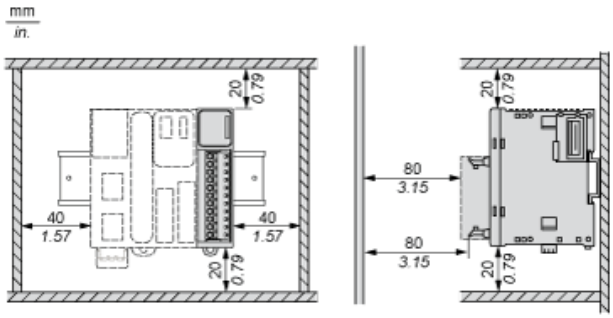

Mounting on a Rail

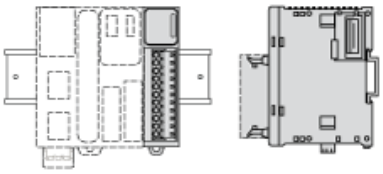

Incorrect Mounting

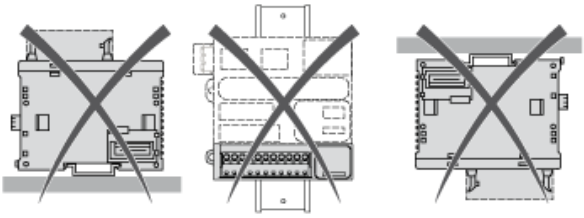

Mounting on a Panel Surface

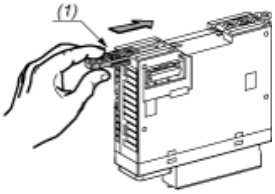

(1) Install a mounting strip

Mounting Hole Layout

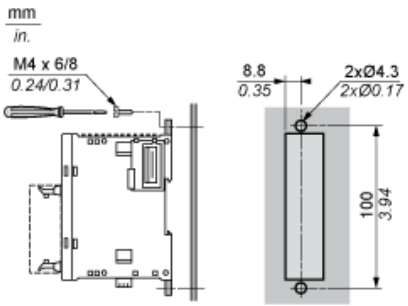

Digital Relay Output Module (16-channel)

Wiring Diagram (Positive Logic)

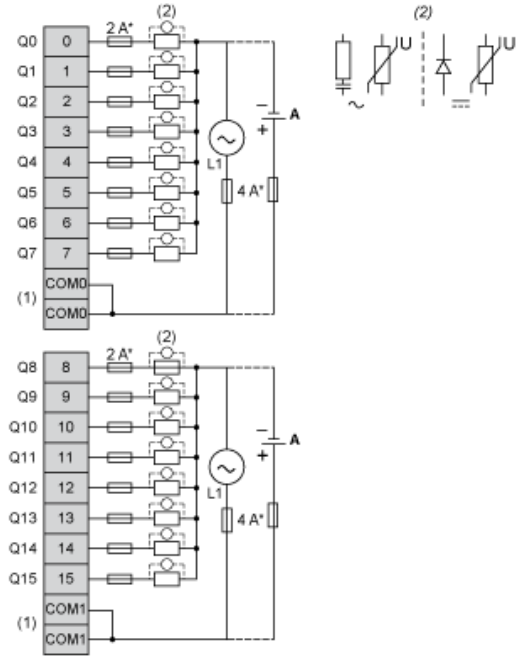

(*) Type T fuse
(1) The COM0 and COM1 terminals are not connected internally.
(2) To improve the life time of the contacts, and to protect from potential inductive load damage, it is recommended to connect a free wheeling diode in parallel to each inductive DC load or an RC snubber in parallel of each inductive AC load.
(A) Source wiring (positive logic).

Wiring Diagram (Negative Logic)

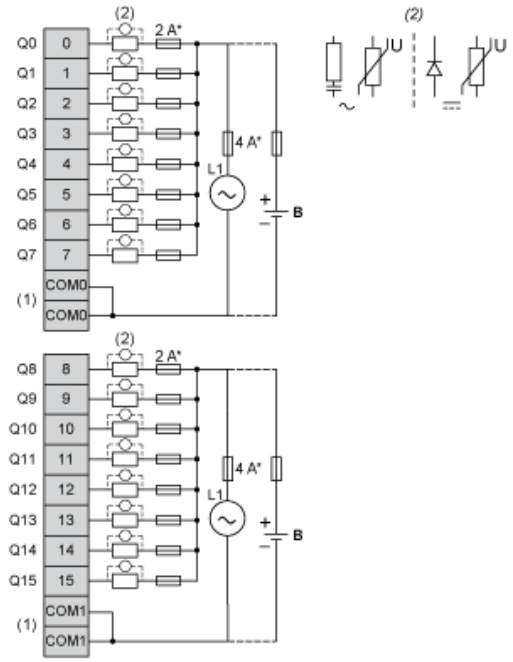

(*) Type T fuse
(1) The COM0 and COM1 terminals are not connected internally.
(2) To improve the life time of the contacts, and to protect from potential inductive load damage, it is recommended to connect a free wheeling diode in parallel to each inductive DC load or an RC snubber in parallel of each inductive AC load.
(B) Sink wiring (negative logic)

Mouser Electronics

Authorized Distributor

Click to View Pricing, Inventory, Delivery & Lifecycle Information:

Schneider Electric:

TM3DQ16R