Data Sheet | Item Number: 750-485

2-channel analog input; 4 … 20 mA; Single-ended; Intrinsically safe

https://www.wago.com/750-485



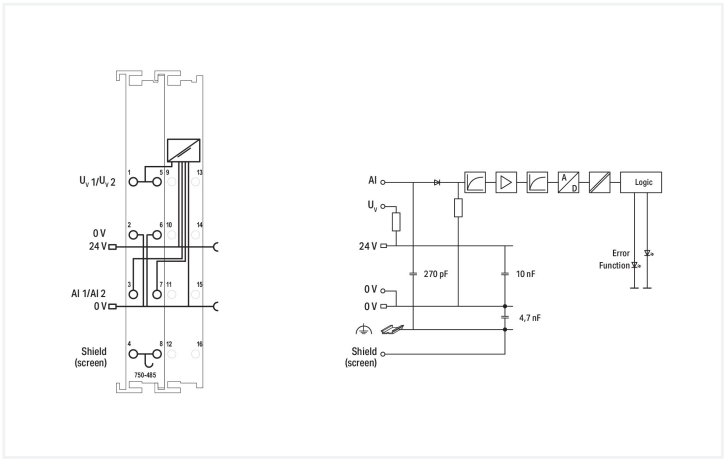

Color: blue

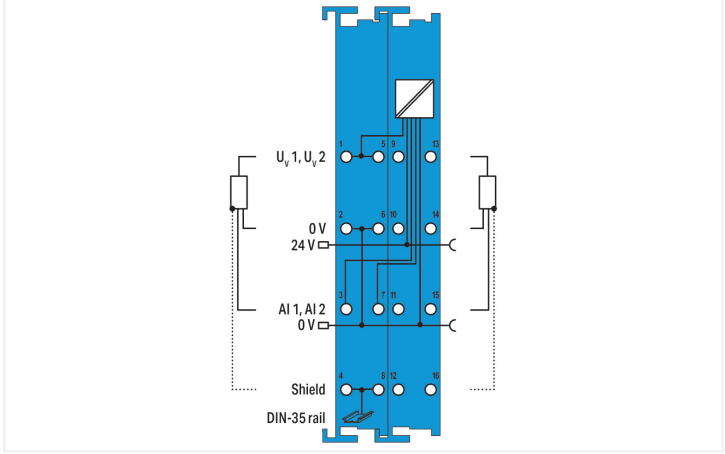

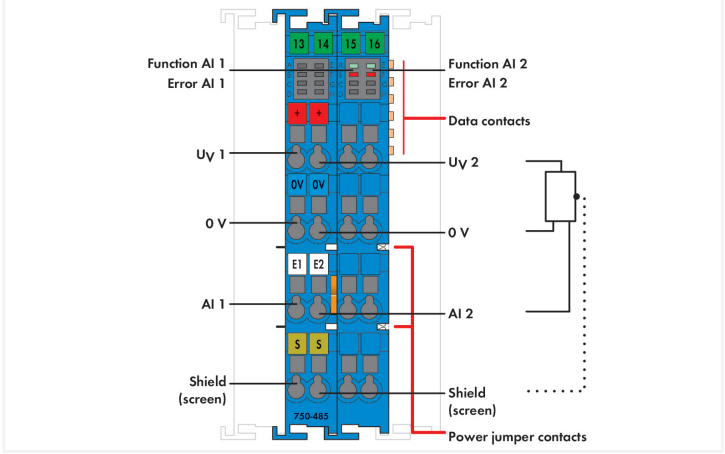

This analog input module powers the intrinsically safe signal conditioners located in the hazardous areas of Zone 0+1 and processes their analog signals.
The WAGO I/O System 750 must be installed either in Zone 2 or in a non-hazardous area.
The 24 V supply is derived from the module's power jumper contacts.
The transmitter supply is non-inherently electronically short-circuit-protected.
The shield directly connects to the DIN-rail.
Indicators:

- Green LED (signal current on/off)
- Red LED (wire breakage, measurement range overflow/underflow)
- Field and system levels are electrically isolated.

Notes

Note	The analog input module must only be operated via 24 VDC Ex i! General information (e.g., installation regulations) on explosion protection is available in the WAGO I/O System 750 manuals!

Technical data

Number of analog inputs	2
Total number of channels (module)	2
Signal type	Current
Signal type (current)	4 … 20 mADC
Sensor connection	2 x (3-wire)
Signal characteristics	Single-ended
Resolution [bit]	12 bits
Conversion time (typ.)	2 ms
Measurement error (reference temperature)	25 °C
Measurement error, deviation (max.) from the upper-range value	0.2 %
Temperature error (max.) of the upper-range value	0.01 %/K
Input resistance (max.)	100 Ω
Intrinsic safety Ex i	Yes
Data width	2 x 16-bit data; 2 x 8-bit control/status (optional)
Supply voltage (system)	5 VDC; via data contacts
Current consumption (5 V system supply)	31 mA
Supply voltage (field)	24 VDC; (Ex i power supply: U_O = max. 27.3 V); via power jumper contacts (power supply via blade contact; transmission via spring contact)
Current consumption, field supply (module with no external load)	11 mA
Power consumption $P_{max.}$	1.3 W
Power loss P_l	0.75 W
Isolation	300 VAC system/supply
Number of incoming power jumper contacts	2
Number of outgoing power jumper contacts	2
Indicators	LED (A, E) green: Function AI 1, AI 2; LED (B, F) red: Error AI 1, AI 2
Marking	ATEX/IECEx: II 3 (1) G Ex ec [ia Ga] IIC T4 Gc; II (1) D [Ex ia Da] IIIC; I (M1) [Ex ia Ma] I

Explosion protection

Ex standard	EN IEC 60079-0, -7, -11
Safety-relevant data (circuit)	U_o = 27.3 V; I_o = 90 mA; P_o = 0.61 W; linear characteristic curve
Reactances Ex ia IIC	L_o = 5 mH; C_o = 88 nF
Reactances Ex ia IIB	L_o = 18 mH; C_o = 680 nF
Reactances Ex ia IIA	L_o = 40 mH; C_o = 2.2 µF
Reactances Ex ia I	L_o = 100 mH; C_o = 3.5 µF
Reactances (note)	Reactances without accounting for the concurrence of capacitance (C_o) and inductance (L_o)

Connection data

Connection technology: inputs/outputs	16 x CAGE CLAMP®
Connection type 1	Inputs/outputs
Solid conductor	0.08 … 2.5 mm² / 28 … 14 AWG
Fine-stranded conductor	0.08 … 2.5 mm² / 28 … 14 AWG
Strip length	8 … 9 mm / 0.31 … 0.35 inches

Continued on next page

Physical data

Width	24 mm / 0.945 inches
Height	100 mm / 3.937 inches
Depth	67.8 mm / 2.669 inches
Depth from upper-edge of DIN-rail	60.6 mm / 2.386 inches

Mechanical data

Mounting type	DIN-35 rail

Material data

Color	blue
Housing material	Polycarbonate; polyamide 6.6
Fire load	2.379 MJ
Weight	97.6 g
Conformity marking	CE

Environmental requirements

Ambient temperature (operation)	0 … +55 °C
Ambient temperature (storage)	-25 … +85 °C
Protection type	IP20
Pollution degree	2 per IEC 61131-2
Operating altitude	0 … 2000 m / 0 … 6562 ft
Mounting position	horizontal (standing/lying); vertical
Relative humidity (without condensation)	95 %
Vibration resistance	4g per IEC 60068-2-6
Shock resistance	15g per IEC 60068-2-27
EMC immunity to interference	per EN 61000-6-2, marine applications
EMC emission of interference	per EN 61000-6-3, marine applications
Exposure to pollutants	per IEC 60068-2-42 and IEC 60068-2-43
Permissible H_2S contaminant concentration at a relative humidity 75 %	10 ppm
Permissible SO_2 contaminant concentration at a relative humidity 75 %	25 ppm

Commercial data

Product Group	15 (I/O System)
eCl@ss 10.0	27-24-26-01
eCl@ss 9.0	27-24-26-01
ETIM 8.0	EC001596
ETIM 7.0	EC001596
PU (SPU)	1 pcs
Packaging type	Box
Country of origin	DE
Customs tariff number	85389099990

 Continued on next page

Environmental Product Compliance

CAS-No.	11120-22-2 1303-86-2 1317-36-8 7439-92-1
REACH Candidate List Substance	Diboron trioxide Lead Lead monoxide Lead silicate
RoHS Compliance Status	Compliant,With Exemption
RoHS Exemption	6(c) 7(a) 7(c)-I 7(c)-II
SCIP notification number (Bulgaria)	5065582b-f270-43af-9e74-f9e23017a7b1
SCIP notification number (Czech Republic)	0170611b-8bdf-4c42-9ac1-72bd32bec088

Approvals / Certificates

General approvals

Approval	Standard	Certificate Name
KC National Radio Research Agency	Article 58-2, Clause 3	MSIP-REM-W43-AIM750
UL Underwriters Laboratories Inc. (ORDINARY LOCATIONS)	UL 508	E175199 Sec.1

Declarations of conformity and manufacturer's declarations

Approval	Standard	Certificate Name
EU-Ex-Declaration of Conformity WAGO GmbH & Co. KG	-	-

Approvals for marine applications

Approval	Standard	Certificate Name
ABS American Bureau of Shipping	-	22-2219060
BV Bureau Veritas S.A.	-	13453/E0 BV
DNV DNV GL SE	DNV-CG-0339,Aug.2021	TAA0000194
KR Korean Register of Shipping	-	KR HMB05880-AC001
LR Lloyds Register EMEA	-	LR22180952TA
PRS Polski Rejestr Statków	-	TE/2236/880590/19
RINA RINA Germany GmbH	-	ELE343521XG001

Approvals for hazardous areas

Approval	Standard	Certificate Name
AEx UL International Germany GmbH	UL 60079	E480271
ATEX TUEV Nord Cert GmbH	EN 60079-0	TUEV_12_ATEX_106032X (Ex ec[iaGa] IIC T4 Gc, [Ex iaDa] IIIC, [Ex iaMa] I)
CCC CNEX	CNCA-C23-01	2020312310000211 (Ex ec[iaGa] IIC T4 Gc, [Ex iaDa] IIIC, [Ex iaMa] I)
EAC Brjansker Zertifizierungsstelle	TP TC 012/2011	EAC RU C-DE.AM02.B.00163/19 ([ExiaMa]I X,2Ex e[iaGa]IIC T4Gc X,[ExiaDa]IIIC X)
INMETRO TÜV Rheinland do Brasil Ltda.	-	TÜV_14.1911_X
KTL Korea Testing Laboratory	KOSHA Article 34, IEC60079-0	20-KA4BO-0643X
TUEV Nord TUEV Nord Cert GmbH	IEC 60079	IECEx TUN 12.0039X (Ex ec[iaGa] IIC T4 Gc, [Ex iaDa] IIIC, [Ex iaMa] I)
UL Underwriters Laboratories Inc. (HAZARDOUS LOCATIONS)	UL 121201	E198726 Sec.1

Continued on next page

Downloads

Environmental Product Compliance

Compliance Search

Environmental Product Compliance 750-485	

Documentation

Manual

Product Manual 2-channel, 4-20mA, Ex i, single-ended	V 1.3.0	pdf 2049.58 KB	
System Manual WAGO I/O System 750/753	V 3.3.3 29.08.2023	pdf 8512.61 KB	

System Description

750/753 Series I/O-System – General Product Information	pdf 953.35 KB	
Overview on WAGO-I/O-SYSTEM 750 approvals	pdf 770.48 KB	
Ex i Overview	pdf 442.07 KB	

Bid Text

750-485	19.02.2019	xml 6.15 KB	
750-485	06.10.2017	doc 31.50 KB	

Instruction Leaflet

CCC Ex (Additional information)	26.04.2023	pdf 143.96 KB	

CAD/CAE-Data

CAD data

2D/3D Models 750-485	

CAE data

EPLAN Data Portal 750-485	
WSCAD Universe 750-485	
ZUKEN Portal 750-485	

Device Files

Device Driver

WAGO USB Service Kabel Treiber / Serie 750 und 857	6.5.3.0 10.09.2014	zip 4721.96 KB	

Continued on next page

1 Compatible Products

1.1 Optional Accessories

1.1.1 DIN-rail

1.1.1.1 Mounting accessories



Item No.: 210-196
Aluminum carrier rail; 35 x 8.2 mm; 1.6 mm thick; 2 m long; unslotted; similar to EN 60715; silver-colored



Item No.: 210-198
Copper carrier rail; 35 x 15 mm; 2.3 mm thick; 2 m long; unslotted; according to EN 60715; copper-colored



Item No.: 210-508
Steel carrier rail; 35 x 15 mm; 1.5 mm thick; 2 m long; slotted; galvanized; similar to EN 60715; silver-colored



Item No.: 210-197
Steel carrier rail; 35 x 15 mm; 1.5 mm thick; 2 m long; slotted; similar to EN 60715; silver-colored



Item No.: 210-506
Steel carrier rail; 35 x 15 mm; 1.5 mm thick; 2 m long; unslotted; galvanized; similar to EN 60715; silver-colored



Item No.: 210-114
Steel carrier rail; 35 x 15 mm; 1.5 mm thick; 2 m long; unslotted; similar to EN 60715; silver-colored



Item No.: 210-118
Steel carrier rail; 35 x 15 mm; 2.3 mm thick; 2 m long; unslotted; according to EN 60715; silver-colored



Item No.: 210-115
Steel carrier rail; 35 x 7.5 mm; 1 mm thick; 2 m long; slotted; according to EN 60715; "Hole width 18 mm; silver-colored



Item No.: 210-112
Steel carrier rail; 35 x 7.5 mm; 1 mm thick; 2 m long; slotted; according to EN 60715; "Hole width 25 mm; silver-colored



Item No.: 210-504
Steel carrier rail; 35 x 7.5 mm; 1 mm thick; 2 m long; slotted; galvanized; according to EN 60715; silver-colored



Item No.: 210-113
Steel carrier rail; 35 x 7.5 mm; 1 mm thick; 2 m long; unslotted; according to EN 60715; silver-colored



Item No.: 210-505
Steel carrier rail; 35 x 7.5 mm; 1 mm thick; 2 m long; unslotted; galvanized; according to EN 60715; silver-colored

1.1.2 Marking

1.1.2.1 Group marker carrier



Item No.: 750-107
Group marker carrier

1.1.2.2 Marker



Item No.: 2009-145/000-006
Mini-WSB Inline; for Smart Printer; 1700 pieces on roll; stretchable 5 - 5.2 mm; plain; snap-on type; blue



Item No.: 2009-145/000-007
Mini-WSB Inline; for Smart Printer; 1700 pieces on roll; stretchable 5 - 5.2 mm; plain; snap-on type; gray



Item No.: 2009-145/000-023
Mini-WSB Inline; for Smart Printer; 1700 pieces on roll; stretchable 5 - 5.2 mm; plain; snap-on type; green



Item No.: 2009-145/000-012
Mini-WSB Inline; for Smart Printer; 1700 pieces on roll; stretchable 5 - 5.2 mm; plain; snap-on type; orange



Item No.: 2009-145/000-005
Mini-WSB Inline; for Smart Printer; 1700 pieces on roll; stretchable 5 - 5.2 mm; plain; snap-on type; red



Item No.: 2009-145/000-024
Mini-WSB Inline; for Smart Printer; 1700 pieces on roll; stretchable 5 - 5.2 mm; plain; snap-on type; violet



Item No.: 2009-145
Mini-WSB Inline; for Smart Printer; 1700 pieces on roll; stretchable 5 - 5.2 mm; plain; snap-on type; white



Item No.: 2009-145/000-002
Mini-WSB Inline; for Smart Printer; 1700 pieces on roll; stretchable 5 - 5.2 mm; plain; snap-on type; yellow



Item No.: 248-501/000-006
Mini-WSB marking card; as card; not stretchable; plain; snap-on type; blue



Item No.: 248-501/000-007
Mini-WSB marking card; as card; not stretchable; plain; snap-on type; gray



Item No.: 248-501/000-023
Mini-WSB marking card; as card; not stretchable; plain; snap-on type; green



Item No.: 248-501/000-017
Mini-WSB marking card; as card; not stretchable; plain; snap-on type; light green



Item No.: 248-501/000-012
Mini-WSB marking card; as card; not stretchable; plain; snap-on type; orange



Item No.: 248-501/000-005
Mini-WSB marking card; as card; not stretchable; plain; snap-on type; red



Item No.: 248-501/000-024
Mini-WSB marking card; as card; not stretchable; plain; snap-on type; violet



Item No.: 248-501
Mini-WSB marking card; as card; not stretchable; plain; snap-on type; white



Item No.: 248-501/000-002
Mini-WSB marking card; as card; not stretchable; plain; snap-on type; yellow

Continued on next page

1.1.2.3 Marker carrier



Item No.: 750-103
Group marker carrier

1.1.3 Shield termination

1.1.3.1 Shield clamping saddles



Item No.: 790-108
Shield clamping saddle; 11 mm wide; diameter of compatible conductor; 3 … 8 mm



Item No.: 790-208
Shield clamping saddle; 12.4 mm wide; 3 … 8 mm



Item No.: 790-116
Shield clamping saddle; 19 mm wide; diameter of compatible conductor; 7 … 16 mm



Item No.: 790-216
Shield clamping saddle; 21.8 mm wide; 6 … 16 mm



Item No.: 790-124
Shield clamping saddle; 27 mm wide; diameter of compatible conductor; 6 … 24 mm



Item No.: 790-220
Shield clamping saddle; 30 mm wide; 6 … 20 mm



Item No.: 790-140
Shield clamping saddle; diameter of compatible conductor

1.1.4 Supply module

1.1.4.1 Supply module



Item No.: 750-606
Power Supply; 24 VDC; Diagnostics; Intrinsically safe



Item No.: 750-625/000-001
Power Supply; 24 VDC; Intrinsically safe