Product data sheet
Characteristics

TM3DQ8T
Discrete output module, Modicon TM3, 8 outputs transistor PNP (screw)



Main

Range of Product	Modicon TM3
Product or Component Type	Discrete output module
Range Compatibility	Modicon M241 Modicon M251 Modicon M221 Modicon M262
Discrete output type	Transistor
Discrete output number	8
Discrete output logic	Positive logic (source)
Discrete output voltage	24 V DC transistor output
Discrete output current	500 mA transistor output

Complementary

Discrete I/O number	8
Current consumption	5 mA 5 V DC via bus connector at state off) 0 mA 24 V DC via bus connector at state off) 20 mA 24 V DC via bus connector at state on) 10 mA 5 V DC via bus connector at state on)
Response time	450 µs (turn-on) 450 µs (turn-off)
Maximum leakage current	0.1 mA transistor output
Maximum voltage drop	<0.4 V
Maximum tungsten load	<3 W transistor output
Local signalling	For output status 1 LED per channel (green)
Electrical connection	11 x 2.5 mm² removable screw terminal block pitch 5.08 mm for outputs
Maximum cable distance between devices	Unshielded cable <98.43 ft (30 m) transistor output
Insulation	Between output and internal logic 500 V AC Non-insulated between outputs
Marking	CE
Mounting support	Top hat type TH35-15 rail IEC 60715 Top hat type TH35-7.5 rail IEC 60715 Plate or panel with fixing kit
Height	3.54 in (90 mm)
Depth	3.33 in (84.6 mm)
Width	1.08 in (27.4 mm)
Net Weight	1.68 lb(US) (0.76 kg)

Environment

Standards	EN/IEC 61131-2 EN/IEC 61010-2-201
Product Certifications	C-tick cULus
Resistance to electrostatic discharge	8 KV in air EN/IEC 61000-4-2 4 kV on contact EN/IEC 61000-4-2
Resistance to electromagnetic fields	9.14 V/M (10 V/m) 80 MHz...1 GHz EN/IEC 61000-4-3 2.74 V/M (3 V/m) 1.4 GHz...2 GHz EN/IEC 61000-4-3 0.91 V/m (1 V/m) 2 GHz...3 GHz EN/IEC 61000-4-3
Resistance to magnetic fields	98.43 A/m (30 A/m) 50/60 Hz EN/IEC 61000-4-8
Resistance to fast transients	1 kV I/OEN/IEC 61000-4-4
Surge withstand	1 kV I/O common mode EN/IEC 61000-4-5 DC

The information provided in this documentation contains general descriptions and/or technical characteristics of the performance of the products contained herein.
This documentation is not intended as a substitute for and is not to be used for determining suitability or reliability of these products for specific user applications.
It is the duty of any such user or integrator to perform the appropriate and complete risk analysis, evaluation and testing of the products with respect to the relevant specific application or use thereof.
Neither Schneider Electric Industries SAS nor any of its affiliates or subsidiaries shall be responsible or liable for misuse of the information contained herein.

Resistance to conducted disturbances	10 V 0.15...80 MHz EN/IEC 61000-4-6 3 V spot frequency (2, 3, 4, 6.2, 8.2, 12.6, 16.5, 18.8, 22, 25 MHz) Marine specification (LR, ABS, DNV, GL)
Electromagnetic emission	Radiated emissions 40 dBµV/m QP class A 10 m)30…230 MHz EN/IEC 55011 Radiated emissions 47 dBµV/m QP class A 10 m)230…1000 MHz EN/IEC 55011
Ambient Air Temperature for Operation	14…95 °F (-10…35 °C) vertical installation 14…131 °F (-10…55 °C) horizontal installation
Ambient Air Temperature for Storage	-13…158 °F (-25…70 °C)
Relative humidity	10…95 %, without condensation in operation) 10…95 %, without condensation in storage)
IP degree of protection	IP20 with protective cover in place
Pollution degree	2
Operating altitude	0...6561.68 ft (0...2000 m)
Storage altitude	0.00…9842.52 ft (0…3000 m)
Vibration resistance	3.5 mm 5…8.4 Hz DIN rail 3 gn 8.4…150 Hz DIN rail 3.5 mm 5…8.4 Hz panel 3 gn 8.4…150 Hz panel
Shock resistance	15 gn 11 ms

Ordering and shipping details

Category	22533-M2XX PLC & ACCESSORIES
Discount Schedule	MSX
GTIN	3606480611469
Returnability	Yes
Country of origin	TW

Packing Units

Unit Type of Package 1	PCE
Number of Units in Package 1	1
Package 1 Height	2.99 in (7.601 cm)
Package 1 Width	4.15 in (10.536 cm)
Package 1 Length	5.10 in (12.965 cm)
Package 1 Weight	7.41 oz (210.0 g)
Unit Type of Package 2	CAR
Number of Units in Package 2	42
Package 2 Height	11.81 in (30.0 cm)
Package 2 Width	15.47 in (39.3 cm)
Package 2 Length	22.17 in (56.3 cm)
Package 2 Weight	22.38 lb(US) (10.15 kg)

Offer Sustainability

Sustainable offer status	Green Premium product
California proposition 65	WARNING: This product can expose you to chemicals including: Lead and lead compounds, which is known to the State of California to cause cancer and birth defects or other reproductive harm. For more information go to www.P65Warnings.ca.gov
REACh Regulation	REACh Declaration
EU RoHS Directive	Pro-active compliance (Product out of EU RoHS legal scope) EU RoHS Declaration
Toxic heavy metal free	Yes
Mercury free	Yes
China RoHS Regulation	China RoHS Declaration
RoHS exemption information	Yes
Environmental Disclosure	Product Environmental Profile
Circularity Profile	End Of Life Information

WEEE	The product must be disposed on European Union markets following specific waste collection and never end up in rubbish bins.
PVC free	Yes

Dimensions

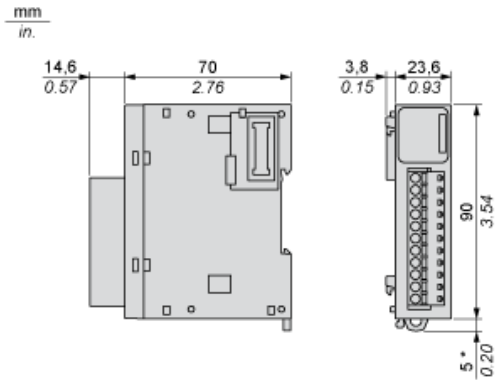

(*) 8.5 mm/0.33 in. when the clamp is pulled out.

Spacing Requirements

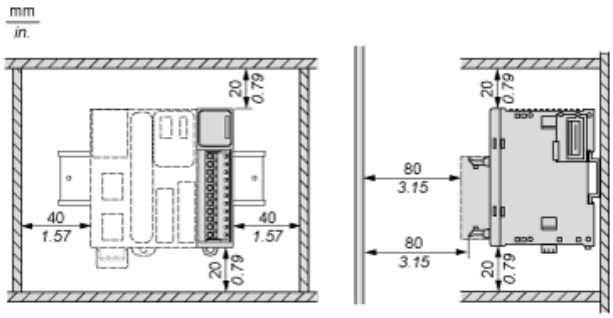

Mounting on a Rail

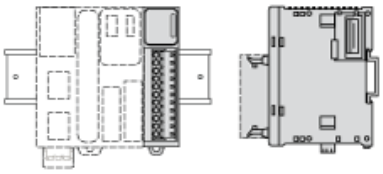

Incorrect Mounting

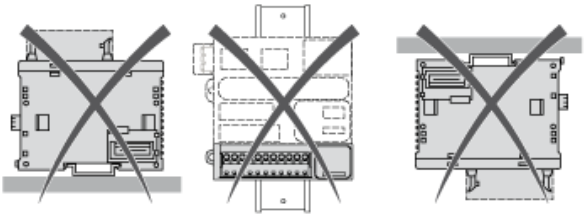

Mounting on a Panel Surface

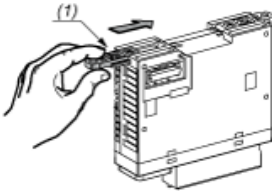

(1) Install a mounting strip

Mounting Hole Layout

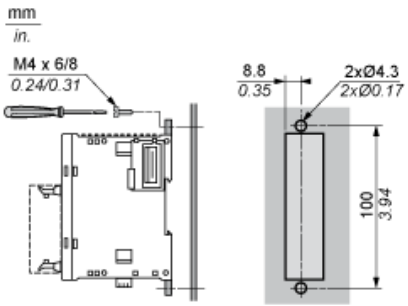

Digital Transistor Output Module (8-channel, Source)

Wiring Diagram

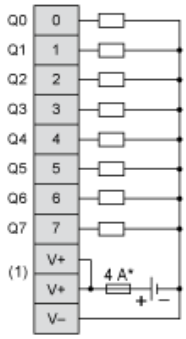

(*) Type T fuse
(1) The V+ terminals are connected internally.

Mouser Electronics

Authorized Distributor

Click to View Pricing, Inventory, Delivery & Lifecycle Information:

Schneider Electric:

TM3DQ8T