4 R&D, Production,Marketing

Innovation is our drive to move ahead.UniMAT has strong innovation,first-class and modern research environment. 35% of our employees and more than 10% of annual sales are involved with R&D.

Quality is our top piority. UniMAT has modern Industrial production enviroment. Our products are strictly operation under ISO9001:2008 from design, research to production. UniMAT has great reputation in China industrial Automation.Every year, in all kinds of authoritative automation exhibitions,industry trade shows, product promotion fairs and technical seminar, you can see our brand every where.



Reception

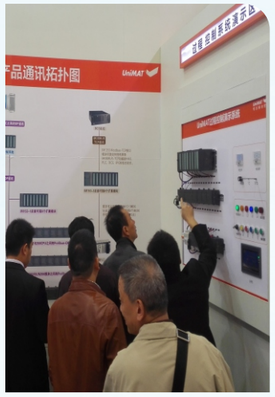

2014 IAS(Shanghai)



2014 IAS(Shanghai)



Factory



Personnel Mien



2013 Promotion conference



2012 Promotion conference



2011 IAS(Shanghai)

5 Sales and Service Network

UniMAT provides the total automation solutions and products for customers all over the world. We have a complete sales and after-sales networks in China and now,our products have been sold to over 30 countries.

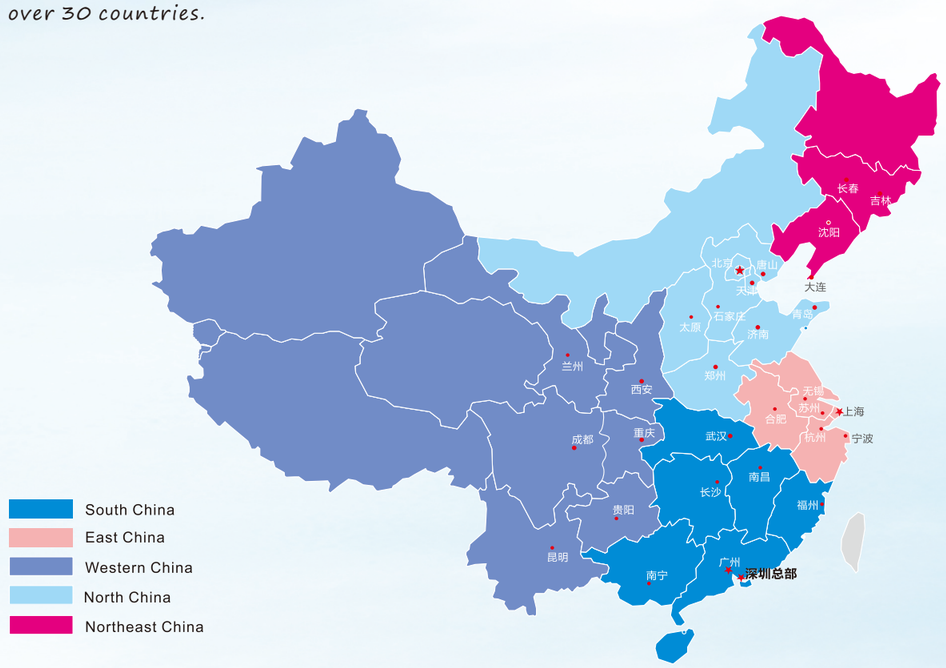



6 Customer Service

The Only Enterprise Offering 3-Year Warranty in China

UniMAT puts customers first,and devotes itself to create add-value that exceeds customers' expectation.UniMAT is so far the only enterprise that offers 3-year warranty in automation industry.

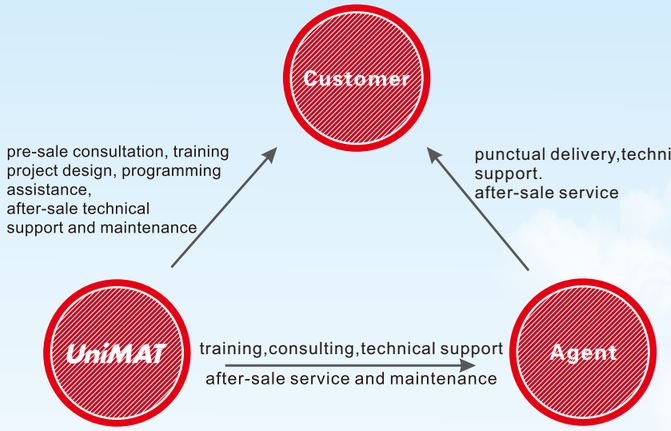

1、Pre-sale Service

a. Product and project consultation, coordination with customers' project bidding etc;
b. Providing solutions of project optimizing;
c. Product and application training.

2、In-sale Service

a. Assisting customers in field installation and debugging, project acceptance and tackling etc in project implementation;
b. Implementing assistance of detailed solutions, e.g. programming service etc.

3、After-sale Service

a. 3-year quality assurance: guarantee replacement within half a year, 3-year warranty and lifetime maintenance;
b. 7×24 national service hotline: 4000 300 890;
c. Reply within 0.5 hour — prompt & professional technical support.

Quick/Reliable/Satisfied





7 Application Field

Industrial Applications


Metallurgy


Automobile


Electric power


Petrochemical


Environmental protection


Cement


Water treatment


New energy

Equipment Supporting


Packaging machines


Plastic machines


Ceramics machines

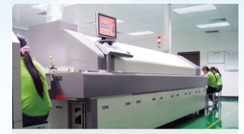
Electronic machines


Textile machines


Construction machines


Pharmaceutial machines


Mining machines





8 Content

1、UN300 series PLC

1)、UN300 CPU ---- 10-14
2)、UN300 Digital Expansion Module ---- 15-18
3)、UN300 Analog Expansion Module ---- 19-23
4)、UN300 Communication Module ---- 24-18
5)、UN300 Bus Interface Module ---- 25
6)、PS307 Power ---- 26
7)、UN300 Special Accessories ---- 27-28

2、UN200 series PLC

1)、UN200 CPU ---- 29-36
2)、UN200 Digital Expansion Module ---- 37-44
3)、UN200 Analog Expansion Module ---- 45-50
4)、UN200 Temperature Collecting Module ---- 51-52
5)、UN200 Communication Module ---- 53-54
6)、Small PLC Common Accessories ---- 55-56

3、UN120seriesEconomical PLC

1)、UN120 CPU ---- 57-62
2)、UN120 Digital Expansion Module ---- 63-66
3)、UN120 Analog Expansion Module ---- 67-70
4)、UN120 Temperature Collecting Module ---- 70-72

4、UniMAT Common Accessories

1)、Profibus Connectors ---- 73
2)、Profibus Cable ---- 73

UN 300 Series Medium PLC

1. Overview of UN 300 Series Medium PLC

UN 300 series medium programmable logic controllers mainly face to the field of automatic process control and industrial automation equipment control, and satisfy the requirement of medium and large scale system. Products use modularization design, the series include CPU, Digital Module, Analog Module, Thermal Couple and Thermal Resistance Module, Bus Interface module, Communication Module, Power Supply and related accessories etc. full set PLC products. It can provide customers with simple, easy-to-use, flexible, comprehensive automation control system solutions. Products have a perfect performance, stable, low mating cost, it's an ideal choice for vast project and OEM.

2. General Technical Specifications

UN 300 series PLC general technical specification		
Module transportation and storage condition		-40℃ to 70℃
Working environment temperature		Horizontal installation position: -10℃ to 70℃ Vertical installation position: -10℃ to 40℃
Relative humidity		5% to 95%, non condensing
Protection level		Protection level of IEC 60529: IP 20
Isolation	· 24V DC Circuit · 230V AC Circuit	Test voltage 500V DC Test voltage 1460V AC
Electromagnetic compatibility		Accord with EMC the requirements of regulations Noise suppression, accord with IEC 61000-6-2 Testing accord with: IEC 61000-4-2, 61000-4-3, IEC61000-4-4, IEC61000-4-5, IEC 61000-4-6
Mechanical level ·vibration, testing condition is accord with		IEC 60068, Part2-6/10 up58Hz; Constant amplitude 0.075mm; 58~150Hz; constant accelerated speed 1g; Vibration period: in every direction of three mutually orthogonal axis, every axis is 10 vibration period.

UN 300 series CPU module

CPU 314-2PtP



High-speed, convenient , high-capacity

CPU 314-2PtP is the CPU of UN300 series PLC. Its development is based on advanced technology platform, and using innovative design philosophy; Processing speed is very fast, easy to use, and has a perfect performance in storage capacity and compatibility. It's small in size and has a compact structure. It's applied to medium program and applications which have a higher requirement to processing capacity and respond speed.

Characteristics:

- Fast processing speed,
  BIT processing speed 0.05 μs, fixed point arithmetic processing speed 0.06 μs, floating point arithmetic processing speed 0.20 μs,
- Easy to use,
  Standard Micro-USB interface, supporting download program directly by USB, there is no need to buy adapter,
- Bigger storage capacity , more storage choice,
  Built-in 1M program storage space, there is no need to buy MMC card,
  It integrates plug-pull TF interface, and can upgrade firmware, supporting 4GB capacity at most,
- Good compatibility,
  It can compatible with industrial universal products in software, hardware and communication field, achieving interconnect and interworking.

Model		CPU 314-2PtP
Memory/ Back-up		
Working memory	Built-in	128 KB
	Expandable	No
Loaded memory	Built-in(flash)	1 MB
	Plug-pull (TF card)	32 GB (maximum)
Backup		No battery; built-in FLASH to keep: program and data
Interface characteristics		
Micro-USB		Directly connecting PC to download users' program
DB9 (×1)		MPI communication
DB9 (×2)		Point to point RS485 serial communication
TF		1. Upgrade firmware; 2. Load storage ; 3. Data storage
CPU/ processing time		
Bit instructions, minimum		0.05 μs
Word instructions, minimum		0.06 μs
Integer math, minimum		0.06 μs
Floating -point math, minimum		0.20 μs
Timer counters and their holding property		
Counters	Quantity	256
	Retentives	Adjustable; Reset: C0~C7
	Range of counter	Lower limit: 0; Upper limit: 999
IEC counters	Availability	Yes
	Type	SFB
Timers	Quantity	256
	Retentive	Adjustable; Reset: without retentivity
	Range of timer	Lower limit: 10ms; Upper limit: 9990s
IEC timers	Availability	Yes
	Type	SFB; no quantity limit, only be limited by working storage
Data ares and their retentive characteristics		
Mark	Quantity	256 bytes
	Retentive	Adjustable; Reset: MB0 ~ MB15
	Quantity of timer storage	8(1 memory byte)
Data blocks	Quantity, maximum	1024; DB1 ~ DB16000
	Capacity, maximum	64 KB
	Retentive	Adjustable; not retained features by DB
Local data	Every priority, maximum	32 KB
	maximum	
CPU/ blocks		
DBs	Quantity, maximum	1024, range of figure: 1~16000
	Capacity, maximum	64 KB
FBs	Quantity, maximum	1024, range of figure: 0~7999
	Capacity, maximum	64 KB
FCs	Quantity, maximum	1024, range of figure: 0~7999
	Capacity, maximum	64 KB

Model		CPU 314-2PtP
OBs	Loop block	OB 1
	Day clock interrupt block	OB 10
	Delayed interrupt block	OB 20, OB 21
	Loop interrupt block	OB 32, OB 33, OB 34, OB 35
	Hardware interrupt block	OB 40
	Diagnosis interrupt block	OB 82
	Fault response block	OB 80, OB 85
	Re-initiate block	OB 100
	Synchronization error response block	OB 121, OB 122
Address area (I/O)		
Address area	Input	1024 bytes
	Output	1024 bytes
Process image	Input	1024 bytes
	Output	1024 bytes
Digital channels	Input	1024
	Output	1024
Analog channels	Input	256
	Output	256
Configuration		
Rack, maximum		4
I/O module quantity rack, maximum		8
Time		
Timer	Hardware timer	Yes
	Buffer	Yes
	Error for every day, maximum	10 s
Operation hours counter	Quantity	1
	Number	0
	Range Value	0 ~ 2^{31} hours (when using SFC 101)
	Selectivity	1 hour
	Retentive	Yes; need to reclock when restarting
Synchronization with upper computer time		Yes
Testing and commissioning functions		
Monitor function	Status/control variable	Yes
	Variable	Inputs, outputs, flags bit, DBs, times, counters
	Variable number, maximum	30
	Monitor variables, maximum	30
	Modify Variables, maximum	14
Force	Supporting	Yes
	Variable	Inputs, outputs
	Number, maximum	10
Diagnostic buffer		
Availability		Yes
Number of entries, maximum		500
Alterable		No

Model		CPU 314-2PtP
Basic communication		
Supporting		Yes
Interface 1	Interface type	Built-in RS 485 interface
	Isolation	No
	Interface power	15 ~ 30 V DC, maximum: 200 mA
Functionality	MPI	Supporting
	Connection quantity	2
	Transmission rate, maximum	187.5 kbps
Interface 2	Interface type	Built-in RS 485 interface
	Isolation	Yes
Functionality	MPI	No
	Point to point	Yes
CPU/ programming		
Programming language		Compatible IEC 61131-1
Nesting levels		8
User program security/ password protection		Yes
System function (SFC)		SFC (0, 1, 2,3, 4, 5, 6, 20, 21, 28, 29, 30, 31, 32, 33, 34, 36, 37, 38, 39, 40, 41, 42, 43, 44, 46, 47, 49, 50, 52, 64, 65, 66, 67, 68, 69, 101)
System function blocks (SFB)		SFB (0, 1, 2, 3, 4, 5)
Physical property		
Dimension (W × H × D)		40 × 125 × 120 mm
Power Supply characteristics		
Power supply		24 VDC
Pemissible range, lower limit (DC)		18.0 V
Pemissible range, upper limit (DC)		28.0 V
External fusing for supply lines (recommendation)		Minimum 3A
Inrush current, typical value		3.5 A
Power supply at power L+, maximum		650 mA
Power consumption, typical value		4 W
Order NO.		UN 314-2AG14-0AB0

Structure Diagram

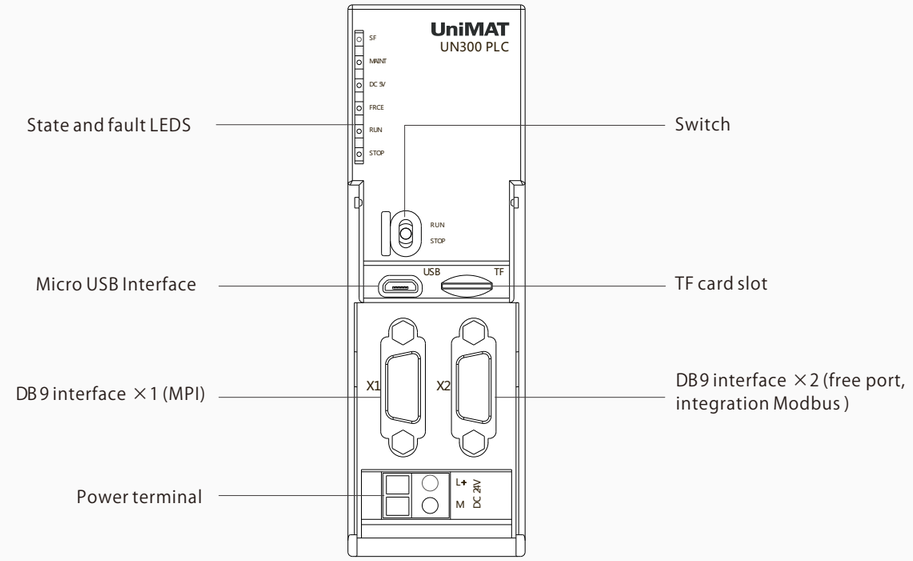

CPU314-2PtP

X1, X2 Db9 Interface Description

X1, X2 D B9 interface description	PIN NO.	X1 PIN definition	X2 PIN definition
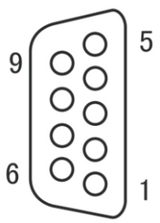	1	–	–
	2	24 V return (RS-485 logic ground)	–
	3	RS-485 signal B	RS-485 signal B
	4	RTS (TTL level)	–
	5	5V power ground terminal	5V power ground terminal
	6	External 5V power's supply positive pole	External 5V power's supply positive pole
	7	24V power	–
	8	RS-485 signal A	RS-485 signal A
	9	Ground connection	–

UN 300 Digital Modules

UN 300 DI Modules

Specifications:

Model	SM321 16DI NPN	SM321 16DI PNP	SM321 16DI	SM321 32DI
Product Picture				
Product Description	16DI,24V DC; High immunity; stable	16DI,24V DC; High immunity; stable	16DI,120V AC/230V AC; High immunity;stable	32DI,24V DC; High immunity;stable
Power consumption				
·From bus current consumption	17mA	17mA	40mA	50mA
·Power loss	3.5W	3.5W	4.9W	6.5W
Number of digital inputs	16	16	16	32
Cable Length	1,000m (Shielded), 600m (Unshielded)			
Input voltage				
Rated value	24V DC	24V DC	120/230V AC	24V DC
“0” for signal	-30~5V DC	-5~30V DC	0~40V AC	-30~5V DC
“1” for signal	13~30V DC	-30~-13V DC	85~264V AC	13~30V DC
Frequency range	/	/	47~63Hz	/
Input current	7mA	7mA	16mA	7mA
Input delay				
From “0” to “1”,Min	1.2~4.8ms	1.2~4.8ms	25ms	1.2~4.8ms
From “1” to “0”,Min	1.2~4.8ms	1.2~4.8ms	25ms	1.2~4.8ms
Front connector	20pin			40pin
Input type	NPN	PNP	/	NPN
2-wire BERO connector	Yes	Yes	Yes	Yes
Permissible quiescent current	1.5mA	1.5mA	2.0mA	1.5mA
Galvanic isolation				
Betewwn the channel and backplane bus	Yes			
Betewwn the channels, in groups of	Yes			
The status indicates	Green LED in each channel			
Dimension (WxHxD)	40×125×120mm			
Order Number	**UN 321-1BH02-0AA0**	**UN 321-1BH50-0AA0**	**UN 321-1FH00-0AA0**	**UN 321-1BL00-0AA0**

Wiring Diagram

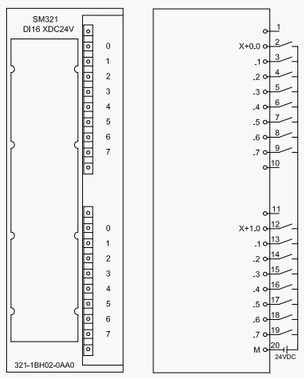

UN 321-1BH02-0AA0

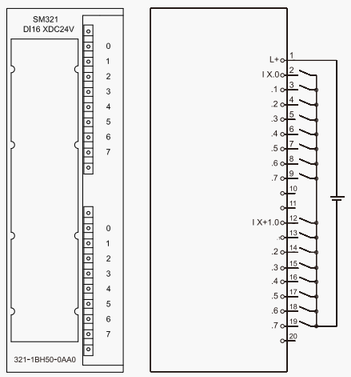

UN 321-1BH50-0AA0

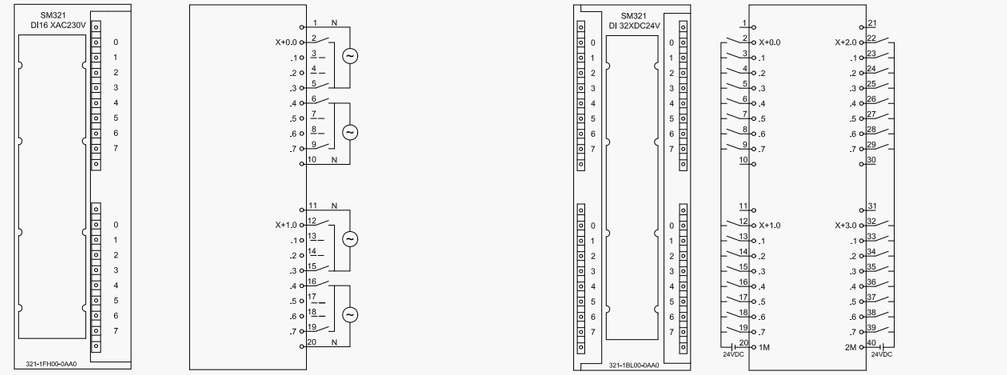

UN 321-1FH00-0AA0

UN 321-1BL00-0AA0

Wiring Diagram of UN 300 DO Modules

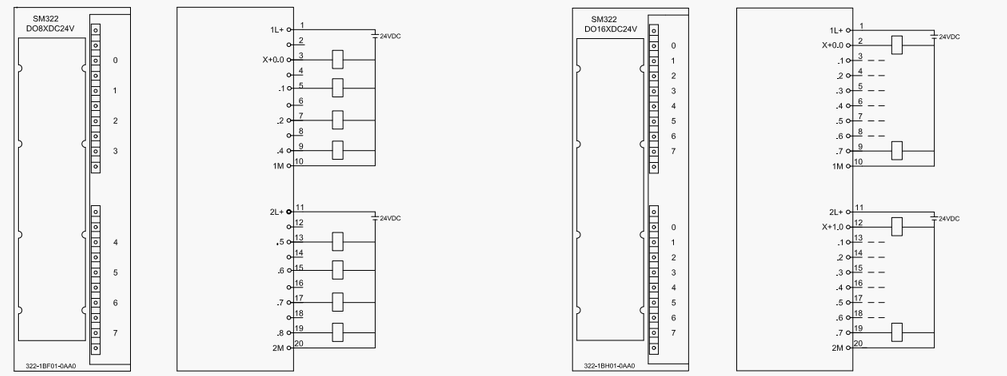

UN 322-1BF01-0AA0

UN 322-1BH01-0AA0

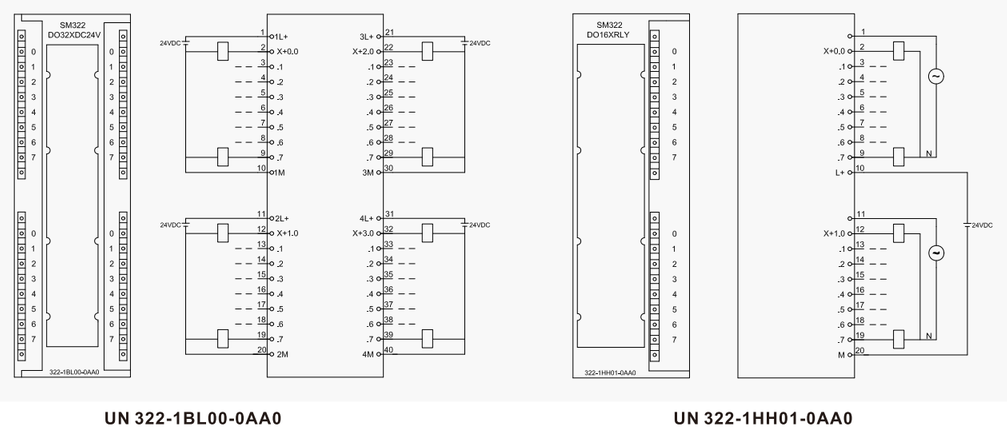

UN 322-1BL00-0AA0

UN 322-1HH01-0AA0

UN 300 DO Modules

Specifications:

Model	SM322 8DO	SM322 16DO	SM322 16DO Relay	SM322 32DO
Picture				
Product Description	8DO,24V DC;Transistor-output Optical isolation with high immunity,stable	16DO,24V DC;Transistor-output Optical isolation with high immunity,stable	16DO;Relay output Optical isolation with high immunity,stable	32DO;24V DC;Transisto-routput;Optical isolation with high immunity,stable
Power consumption				
·From bus current consumption	50mA	80mA	100mA	90mA
·Power loss	6.8W	4.9W	4.5W	6W
Digital input	8	16	16, Relay	32
Cable Length	1,000m (Shielded), 600m (Unshielded)			
Output Short-circuit protection	Yes,Electronic	Yes,Electronic	/	Yes,Electronic
Voltage limit that causing circuit dropout	L+(-48V)	L+(-53V)	/	L+(-53V)
Lamp load Max	10W	5W	200W	5W
Output voltage:"1" signal	Min,L+(-0.8V)	Min,L+(-0.8V)	/	Min,L+(-0.8V)
Output current:"1" signal	2A	0.5A	2A	0.5A
Contact machine lifetime	/	/	1,000,000	/
Contact electric lifetime (rated load voltage)	/	/	100,000	/
Total output current (per group)	4A	4A	8A	4A
Galvanic isolation				
·Between the channels and backplane bus	Yes,Optocoupler			
·Between the channels, in groups of	Yes			
Switching frequency for contacts				
Resistive loads,Max	100Hz	100Hz	1Hz	100Hz
Inductive loads,Max	0.5Hz			
Lamp loads,Max	10Hz	10Hz	1Hz	10Hz
Mechanical load, Max	/	/	10Hz	/
The status indicates	Green LED in each channel			
Front connector	20pin			40pin
Dimension(WxHx D)	40×125×120mm			
Order Number	**UN 322-1BF01-0AA0**	**UN 322-1BH01-0AA0**	**UN 322-1HH01-0AA0**	**UN 322-1BL00-0AA0**

Remark: The wiring diagram,please check previous page

UniMAT
UN 300 Series PLC

UN 300 DI / DO Modules

Specifications:

Model	SM323 16 DI / 16 DO
Picture	
Product Description	16DI,16DO,24 VDC Transistor output;Optical isolation with high immunity
Power consumption	
·From backplane bus current consumption	80mA
·Power loss	6.5W
Input Feature	
Digital inputs	16
Input voltage	
·Rated value	24V DC
·"0" for signal	-30~5V DC
·"1" for signal	13~30V DC
Input current	7mA
Input delay	
·From "0" to "1",Min	1.2~4.8ms
·From "1" to "0",Min	1.2~4.8ms
Input type	NPN
2-wire BERO connection	Yes
Permissible quiescent current	1.5mA

Output Feature	
Digital outputs	16
Short-circuit protection	Yes,Electronic
Inductive cutoff voltage	L+(-53V)
Lamp load Max	5W
Output voltage for "1" signal	Min:L+(-0.8V)
Output current for "1" signal	0.5A
Galvanic isolation	
Between the channels and backplane bus	Yes,Optocoupler
Between the channels, in groups of	Yes
Cable Length	1,000m (Shielded) 600m (Unshielded)
The status indicates	Green LED in each channel
Front connector	40pin
Dimension (W x H x D)	40×125×120(mm)
Order Number	**UN 323-1BL00-0AA0**

Wiring Diagram

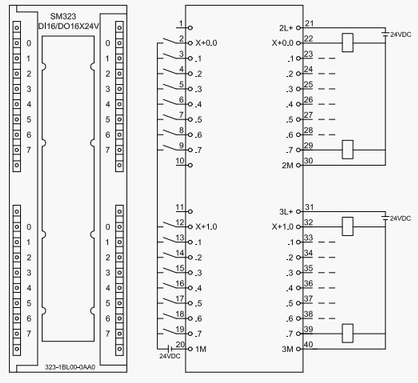

UN 323-1BL00-0AA0

UN300 Analog Modules

UN300 TC & RTD Modules

★ Remark: UN331-7PF01-0AB0, UN331-7PF11-0AB0 are dedicated Temperature Measurement Modules, support more types RTD/TC, have goodchannel to channel isolation and temperature compensation functions, suitable for bad situation and high accuracy field.

Specifications:

Model	SM331 8 AI	SM331 8 AI	SM331 8AI RTD	SM331 8 AI TC
Product Picture				
Product Description	8AI; voltage/current/ RTD temperature measurement, Resolution:13bits, Optocouple isolation with high immunity	8AI; Full-function temperature measurement, Resolution:16bits, External Mechanical range Switch can improve the measurement sta -bility at the most. Optical Isolation with high Immunity The Current input with overcurrent protection	8AI RTD temperature measurement, Resolution: 16bits Supports many kinds sensors Low power consumption, small heat, Operation	8AI TC Temperature Meas -urement Module Resoluti -on 16bits Support voltage range: +/- 150mV Support wide range of env -ironment temperature Int -errupts
Power consumption				
Rated value	/	24V DC	24V DC	24V DC
From bus current consumption	90mA	100mA	50mA	100mA
From L+current consumption	/	25mA	40mA	200mA
Power loss	0.4W	1W	1W	3W
The power of transmitter				
Supply current	/	Per channel (Max)60mA	/	/
Short-circuit protection	/	Yes	/	/
Analog inputs	8	8	8	8
Cable Length (Shielded)	Max. 200m	200m (Max.50m for 80mV)	Max. 200m	Max. 100m
Input type and input range				
voltage	1~5V,0~10V,±50mV ±500mV, ±1V, ±5V, ±10V	±80mV,±250mV,±500mV,±1V , ±2.5V ±5V,1~5V, ±10V	/	±150mV(-27648~+27648 using this function when choosing U type
current(4wire)	±20mA, 0~20mA, 4~20mA	±3.2mA, ±10mA, ±20mA, 4~20mA	/	/
current(2wire)	/	4~20mA	/	/
Resistance	600Ω,6KΩ	600Ω, 300Ω, 150Ω,	150Ω, 300Ω, 600Ω,	/
thermocouple	/	K,J,N,E,L	/	Type:T,E,J,K,N,R,S,B
RTD	Pt100 standard type/climatic type Ni100 standard type/climatic type Ni1000 standard type/climatic type LG-Ni1000 standard type/climatic type	Pt100,Ni100	Pt10、Pt50、Pt100,Pt200、Pt500、Pt1000、Ni100、Ni120、Ni200,Ni500、Ni1000、Cu10(9.035)、Cu50、Cu100	/
A/D conversion accuracy	13bits	16bits	16bits	16bits
Basic conversion time (each channel)	66/55ms	0.5ms/12.5ms/25ms/100ms	190ms	190ms
Interference suppression frequency	50/60Hz	400/60/30/10Hz	400/60/50Hz	400/60/50Hz
Tolerance(Operating limit over entire temperature range)				
Voltage	±0.6%	±0.6%	/	±0.6%
Current	±0.6%	±0.6%	/	/
Resistance	±0.6%	±0.6%	±0.1%	/
Temperature	±1℃	±1℃	±1℃	±1℃
Interrupts				
Diagnostic interrupt	No	set up parameters per group		
Limitvalue interrupt	No	can set up parameters		
Isolation				
Between the channels	No	No	Yes	Yes
Between the channels and Backplane bus	Yes	Yes	Yes	Yes
Front connector	40pin	20pin	40pin	40pin
Dimension (WxHxD)	40x125x120mm	40x125x120mm	40x125x120mm	40x125x120mm
Order Number	**UN 331-1KF02-0AB0**	**UN 331-7KF02-0AB0**	**UN 331-7PF01-0AB0**	**UN 331-7PF11-0AB0**

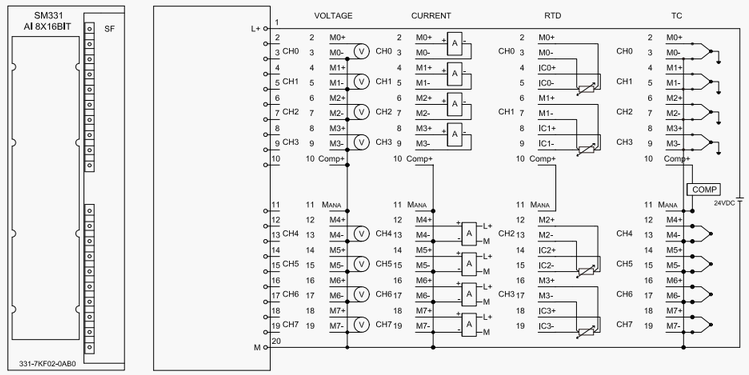

UN 331-7KF02-0AB0

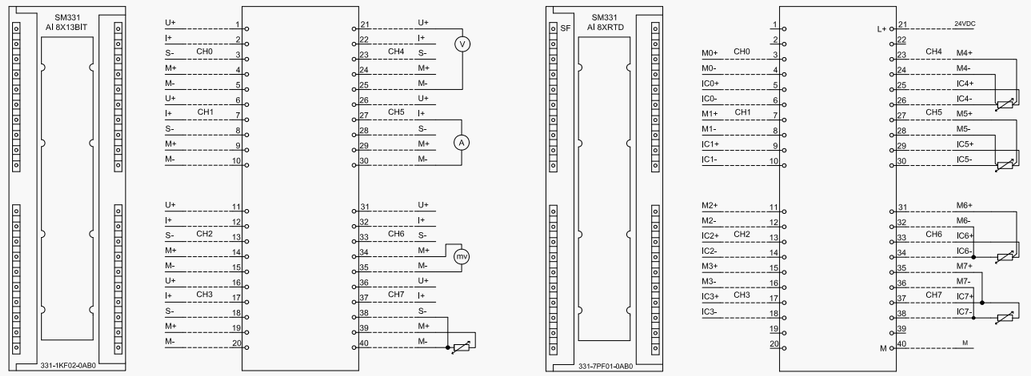

UN 331-1KF02-0AB0 **UN 331-7PF01-0AB0**

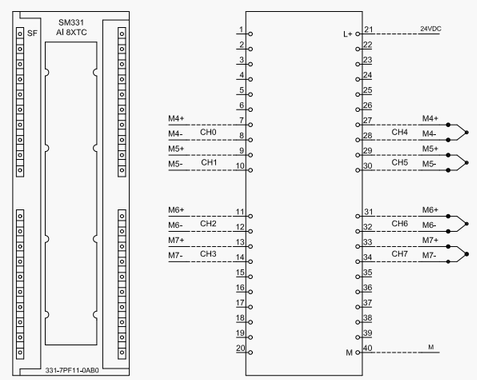

UN 331－7PF11－0AB0

UN 300 AO Modules

Model		SM332 4AO	SM332 8AO
Picture			
Product Description		4AO; Resolution:12bits; High-accuracy Support wide range of environment temperature Tolerance:Voltage output: ±0.5%, Current output: ±0.6%	8AO; Resolution:12bits; High-accuracy Support wide range of environment temperature Tolerance…Voltage output: ±0.5%, Current output: ±0.6%
Power consumption			
From bus current consumption		40mA	100mA
From L+		40mA	70mA
Power loss		3W	6W
Aanalog outputs		4	8
Loaded voltage L+rated value		24V	24V
Shielded cable length,Max		200m	200m
Voltage output,short circuit Current protection		Yes	Yes
Voltage output, Short circuit current ,Max		25mA	25mA
Current output, No-load voltage,Max		18V	18V
Load impedance	·Voltage outputs,Min	1KΩ	1KΩ
	·current outputs,Max	500Ω	500Ω
Output ranges	·voltage	±10V,0~10V,1~5V	±10V,0~10V,1~5V
	·current	±20mA,0~20mA,4~20mA	±20mA,0~20mA,4~20mA
D/A conversion accuracy		12 bits	12 bits
conversion time(per channel)		Max 0.8ms	Max 0.8ms
Setting time	·Resistive load	0.1ms	0.1ms
	·Inductive load	3.3ms	3.3ms
	·Capactive load	0.5ms	0.5ms
Output crosstalk		>40dB	>40dB
Tolerance(Operating limit over entire temperature range)			
·Voltage output		±0.5%	±0.5%
·Current output		±0.6%	±0.6%
Diagnostic interrupt		None	None
Group error display		Red LED	Red LED
Isolation test for contact			
Between the channels and the backplane bus		Yes	Yes
Between the channels and load voltage L+		Yes	Yes
Front connector		20pin	40pin
Dimension (W x H x D)		40×125×120mm	40×125×120mm
Order Number		**UN 332-5HD01-0AB0**	**UN 332-5HF00-0AB0**

Remark: The wiring diagram, please see page 41 .

UniMAT
UN 300 Series PLC

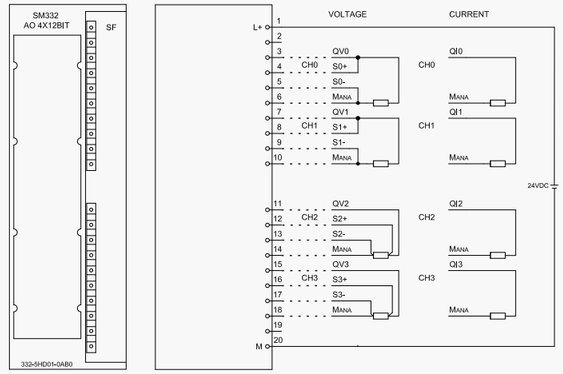

UN 332-5HD01-0AB0

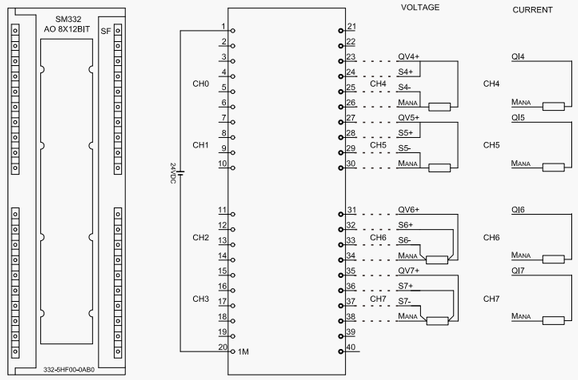

UN 332-5HF00-0AB0

The Wiring Diagram Of UN 335-7HG02-0AB0

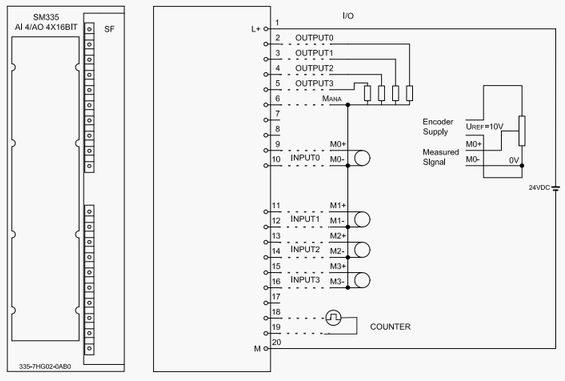

UN 335-7HG02-0AB0

UN 300 High-Speed I/O Module

Specifications:

Model	SM335 4 high-speed inputs/ 4 high-speed outputs
Picture	
Product Description	UniMAT UN 300 high-speed I/O module 4 high-speed AI (basic conversion time of each channel is at most 200μs); 4 high-speed AO(basic conversion time of each channel is at most 50μs); Encoder power:10V/25mA; 1 counter input(24V/400Hz);

Analog Input Feature		
Input range(rated-value)/input impedance		
Voltage	±1V	10MΩ
	±2.5V	10MΩ
	±10V	10MΩ
	0~2V	10MΩ
	0~10V	10MΩ
Current	±10mA	100Ω
	0~20mA	100Ω
	4~20mA	100Ω
Voltage(Damage limit)(Max.)	±30V	
Current(Damage limit)(Max.)	25mA	
Signal sensor wiring		
For measuring of current		
Two-wire sensor	Yes	
Four-wire sensor	None	
For measuring of resistance	None	
Measuring principle	Successive approximation	
conversion time(per channel)	200μs	
Four-channel basic conversion time	1ms	
Resolution		
Bipolar	13+Sign bit	
Unipolar	14 bits	
The output data of sensor power		
Rated voltage	10V	
Output current(Max)	25mA	
To prevent short-circuit	Yes	
Tolerance(voltage input limit)	0.2%	
Common mode rejection(Vpp<3V)	>65dB	

Model Feature Data		
Analog outputs		4
Analog Inputs		4
Cable Length (Shielded)		200m
Detection range of breaking wire(4~20mA)		30m
Voltage and current	Rated voltage	24V DC
	Reverse polarity protection	Yes
	Electrical isolation	Yes
Current loss	From backplane bus (Max)	75mA
	From L+ (Max)	150mA
	Power loss (Max)	3.6W
Diagnostic interrupt		
Limit value interrupt		None
Loop termination Circulation interrupt		Yes,Configurable
Diagnostic interrupt		None
Diagnostic function		
Group error display		Yes,Red LED
Can read Diagnostic information		None

Analog output Feature	
Resolution	
±10V	11 bit +Sign bit
0~10V	12bit
Output delay,Max	800μs
Setting time	
Resistive loads	<0.8ms
Capacitive loads	<3.3ms
Inductive loads	<0.5ms
Response to the model of CPU STOP	0CV/KLV
Output cross talk	40dB
Tolerance (voltage output limit)	0.2%
Output range(rated value)	±10V,0~10V
Load impedance	
Resistive loads,Min	3kΩ
Capacitive loads,Max	1μF
Inductive loads,Max	1mH
Voltage output	
Short-circuit protection current(Max)	8mA
For Voltage output wiring	
Two-wire	Yes
Four-wire	None
Counter Feature	
Number of inputs	1
Rated load voltage	24V DC
Reverse polarity protection	Yes
Electrical isolation	Yes
Generation of Counter	
Measuring principle	Test 2 up
Time resolution	0.5μs
Max.Frequency	400Hz
Dimension (W x H x D)	40×125×120mm
Order Number	**UN 335-7HG02-0AB0**

UN300 Communication Module

CP 341 RS485/422 MODBUS Communication Module

1、CP 341 overview

CP341 communication modules communicate for serial data with high speed and high performance via point-to-point link, easing the communication burden of CPU. It supports ASC Ⅱ and MODBUS master-slave station protocols.Customer no need buy MODBUS hardware dongle, CP341 integrates all.



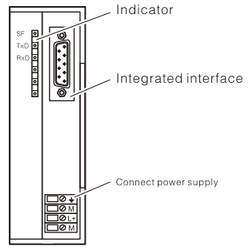

2、Definition of communication port pins

9-pin D Front connector	Pin	Identifier	Input/Output	Implication
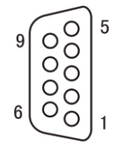	1	-	–	–
	2	-	–	–
	3	R/T (B) +	Input	Receive data (four-wire mode)
			Input/Output	Receive-transmit data (two-wire mode)
	4	T (B) +	Output	Transmit data (four-wire mode)
	5	GND	–	Isolate from ground
	6	5V	–	Isolation 5V
	7	-	–	-
	8	R/T (A) -	Input	Receive data (four-wire mode)
			Input/Output	Receive-transmit data (two-wire mode)
	9	T (A) –	Output	Transmit data (four-wire mode)

3、Specifications

Power supply	From rear panel 5V, no external power
Current consumption, Max.	150mA
Power loss, typical value	0.65W
Power loss, Max.	0.75W
No. of ports	1
Interface type	RS 485/RS 422
Communication protocol	ASCII、MODBUS
Communication speed	0.3 (Min.) ; 0.6; 1.2; 2.4; 4.8; 9.6; 19.2; 38.4; 57.6; 76.8 and 115.2 (Max.) Kbps
Communication frame format	Data length: 7-8 bytes Stop bit: 1-2 bits Verification mode: odd-even check, no verification
Maximum packet length	2048 bytes
Dimension (W * D * H)	40×125×120 mm

4、Order info.

Name	Description	Order Number
CP341	MODBUS communication module	UN 341-1CH02-0AE0

Bus Interface Modules

Specifications:

Model	IM 153 PROFIBUS-DP
Product Picture	
Product Description	Used to connect remote I/O modules with profibus-DP interface. Each slave station can connect 8 UN 300 expansion modules.
Modules characteristic	
Protocol	PROFIBUS-DP
Transimission rate,Max	12Mbps Automatic adapt
Address space, Max	128bytes input/128bytes output
Expansion modules,Max	8
Isolation voltage	500V
Rated supply voltage	
Current consumption (24V DC)	625mA
Dimension (W x H x D)	40×125×120mm
Order Number	**UN 153-1AA03-0XB0**

PS 307 Power

Specifications:

Model		PS307 power,5A	PS307 power,10A
Type		5A	10A
Product picture			
Description		Max. output current: 5A; Output voltage: 24V DC; Connect single-phase AC system(input voltage:120/230VAC,50/60Hz) The isolation is stable; Can be used as a load power supply.	Max. output current: 10A; Output voltage: 24V DC; Connect single-phase AC system (input voltage:120/230VAC,50/60Hz) The isolation is stable; Can be used as a load power supply
Input voltage rated value		120/230VAC	
Voltage range		85~132V/170~264V AC	
System frequency	Rated value	50 Hz ~ 60 Hz	
	Permissible tolerance	47Hz ~ 63 Hz	
Rated input current value	At 230V	1.3A	1.8A
	At 120V	2.1A	4.1A
Switch-on		< 45 A, < 3 ms	< 55 A, < 3 ms
I^2t (at Switch-on)		$1.2A^2s$	$3.3A^2s$
Output voltage	Rated	24VDC	
	Total tolerance, static ±	3%	
	Rise value	＜2s，typical value: 60ms	Max:1.5s，typical value: 80ms
Output current value		5A，can not be connected by Parallel connection	10A，can not be connected by Parallel connection
Short-circuit protection		Electronic shut off, cold start automatically	
Residual ripple		Max: $150mV_{pp}$	Max: $150mV_{pp}$
Discharge current		< 3.5 mA (typical value:0.3 mA)	< 3.5 mA (typical value:0.5 mA)
Efficiency		About 87%	
Power consumption		typical value: 18W	typical value: 34W
Output voltage indicating lamp.		Normally at 24V, green indicating lamp is light up	
Dimension (W×H×D)		60×125×120mm	120×125×120mm
Weight,approx.		0.6kg	1.1kg
Order number		**UN 307-1EA01-0AA0**	**UN 307-1KA01-0AA0**

UN 300 Special Accessories



USB–MPI /DP Adapter

1、Brief description

It is compatible with Siemens PC USB Adapter（6ES7 972-0CB20-0XA0）,and enables you to link the programming devices/PCs from its USB interface to MPI interface, DP interface industry field bus. It receives power supply via USB interface of the industry field bus. It can be used for Siemens S7-300/400 PLC and UniMAT UN300 PLC. PC/MPI USB Adapter is designed for industry fields with isolation functions. Both its USB interface and RS485 interface have surge protection and lightning-defend protection circuit, thus it is hot swappable so that it suits the industrial fields with great disturabance&interfence.

It has power signal, USB communication signal and 485 communication signal. It is a good complementary device for portable device such as notebook.

2、Technique characteristics

- ☐ Profibus-DP/MPI communication, field bus protocol self detected
- ☐ USB interface supply power, with over-current protection and surge protection
- ☐ RS485 interface has surge protection and lightning-defend protection.

Industrial Standard：ITU-TK20/21、VDE0433

- ☐ With power signal;USB communication signal and RS485 communication signal.
- ☐ Alterable external +24V power supply;USB V2.0 supply power with +5V

3、Specification：

It supports MPI, PROFIBUS automotive detection，9.6K to 1.5M baud rate self-adaption

Baud Rate	MPI	PROFIBUS			
		DP	Standard	General	Self-defined
9.6Kbps		√	√	√	√
19.2Kbps	√	√	√	√	√
45.45Kbps		√	√	√	√
93.75Kbps		√	√	√	√
187.5Kbps	√	√	√	√	√
0.5Mbps		√	√	√	√
1.5Mbps	√	√	√	√	√

4、Order Data:

Name	Order Number
USB–MPI /DP Adapter	UN 972–0CB20–0XA0



RS232–MPI Serial–Port Adapter

1、Brief description

The RS232-MPI adapter can realize the level switch from RS232 to RS485 port and the switch of protocols from RS232 to MPI MultiPoint Interface .It is used for the communication between S7-300 PLC and the third party HMI, such as touch screens Weinview, Kinco, MCGS, Samkoon which support MPI protocol.

It is the optical isolation adapter that aims to industrial designs. Provided with surging protection and lightening-proof circuit both at RS232 and RS485 ports and being able to be inserted and extracted with power on randomly, it is especially suitable for industrial fields where there's much interference to easily destroy the communication ports as its various protections secure the safe running of the system.

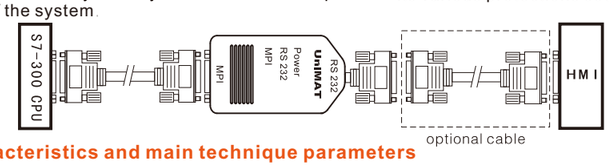

2、Characteristics and main technique parameters

* 24V DC powered by MPI port of PLC，appox.1w power consumption with over current protection and surge protection.
* 1000V DC isolation voltage，-10~70℃ working temperature
* RS232 interface has surge protection, RS485 interface has 500W lightning-defend protection and over current protection
* RS232 interface baud rate: 9600bps, 19.2Kbps, 38.4Kbps standard baud rate self-adaption
* MPI interface baud rate: 187.5Kbps and 19.2Kbps self-adaption, no need for any other devices.
* Power indicator, RS232 indicator and MPI indicator, the cable length is 3.5m total.
* Different HMI should use different cables, pls check with the suppliers.

3、Order Data:

Name	Description	Order Number
RS 232-MPI serial-port Adapter	24V DC Optical Isolation, 3.5M	UN 972–0CA23–0XA0

UN 300 Special Accessories



UN 300 Din Rail

Name	Order Number
160mm din rail	UN 390-1AB60-0AA0
320mm din rail	UN 390-1AD20-0AA0
483mm din rail	UN 390-1AE80-0AA0
530mm din rail	UN 390-1AF30-0AA0
830mm din rail	UN 390-1AJ30-0XA0
483mm din rail (Hot–plugging)	UN 195-1GA00-0XA0
530mm din rail (Hot–plugging)	UN 195-1GF30-0XA0
620mm din rail (Hot–plugging)	UN 195-1GG30-0XA0

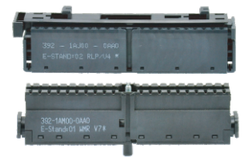

UN 300 Front Connector

Front Connector	Order Number
20–pin front connector	UN 392-1AJ00-0AA0
40–pin front connector	UN 392-1AM00-0AA0

UniMAT General Accessories

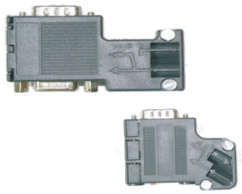

Profibus Interface

Name	Order Number
90° without program interface	UN 972-0BA12-0XA0
90° with program interface	UN 972-0BB12-0XA0
35° without program interface	UN 972-0BA41-0XA0
35° with program interface	UN 972-0BB41-0XA0



Profibus Cable

Name	Order Number
PROFIBUS cable	UN 830-0EH10